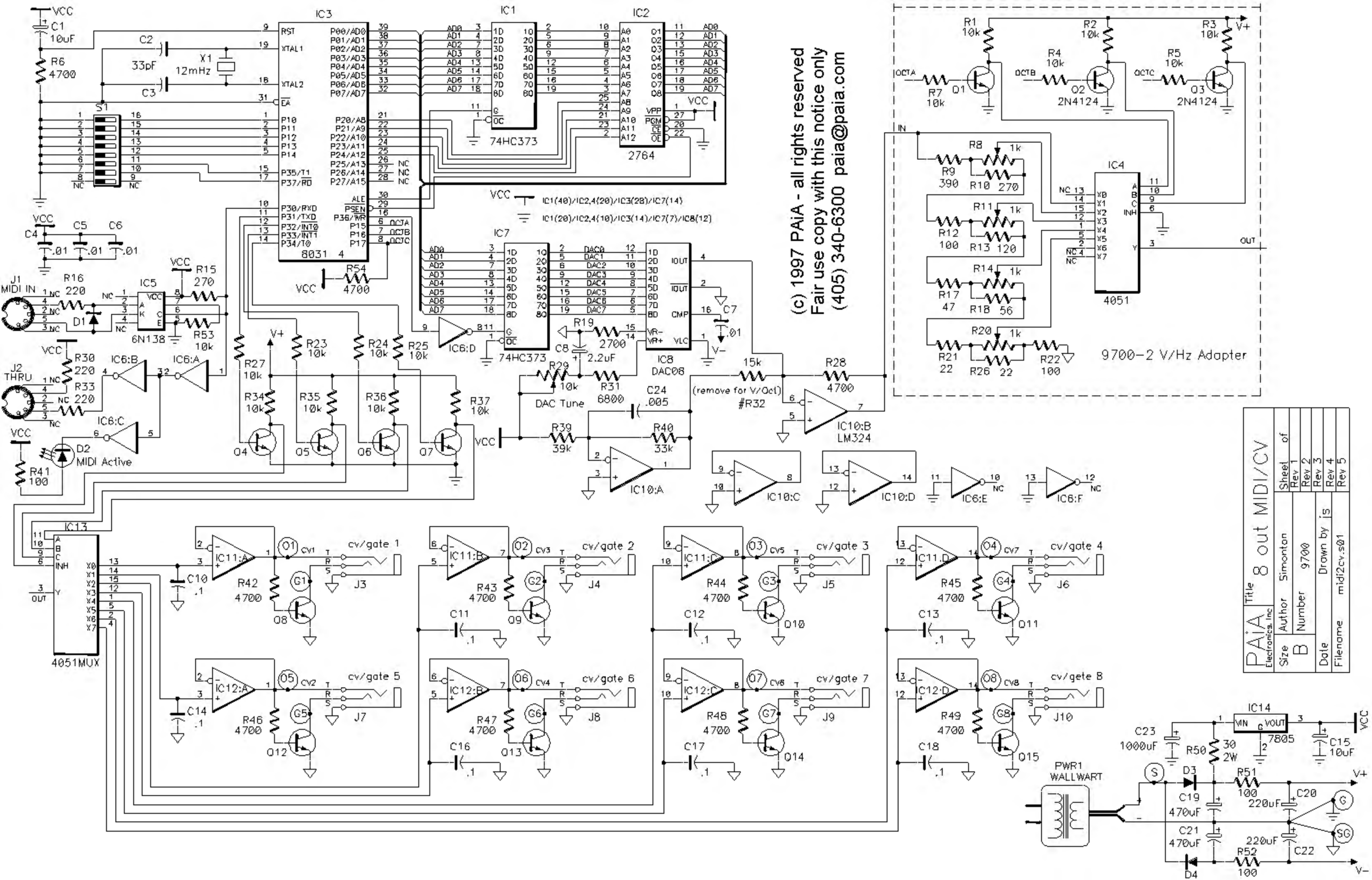

(c) 1997 PAiA - all rights reserved
Fair use copy with this notice only
(405) 340-6300 paia@paia.com
9700-2 V/Hz Adapter
IC3
8031
IC1
74HC373
IC2
2764
IC7
74HC373
IC8
DAC08
IC4
4051
IC5
6N138
IC13
4051MUX
IC10:A
IC10:B
LM324
IC10:C
IC10:D
IC6:E
IC6:F
IC14
7805
PWR1
WALLWART
J1
MIDI IN
J2
THRU
D2
MIDI Active
DAC Tune
(remove for V/Oct)
#R32
cv/gate 1
cv/gate 2
cv/gate 3
cv/gate 4
cv/gate 5
cv/gate 6
cv/gate 7
cv/gete 8
PAiA Electronics, Inc
Title
8 out MIDI/CV
Size
B
Author
Simonton
Number
9700
Date
Drawn by
js
Filename
midi2cv.s01
Sheet
of
Rev 1
Rev 2
Rev 3
Rev 4
Rev 5